REVISION HISTORY				
ZONE	REV	DESCRIPTION	DATE	APPROVED
	-	INITIAL RELEASE	3/24/15	hhmi\\arnoldj

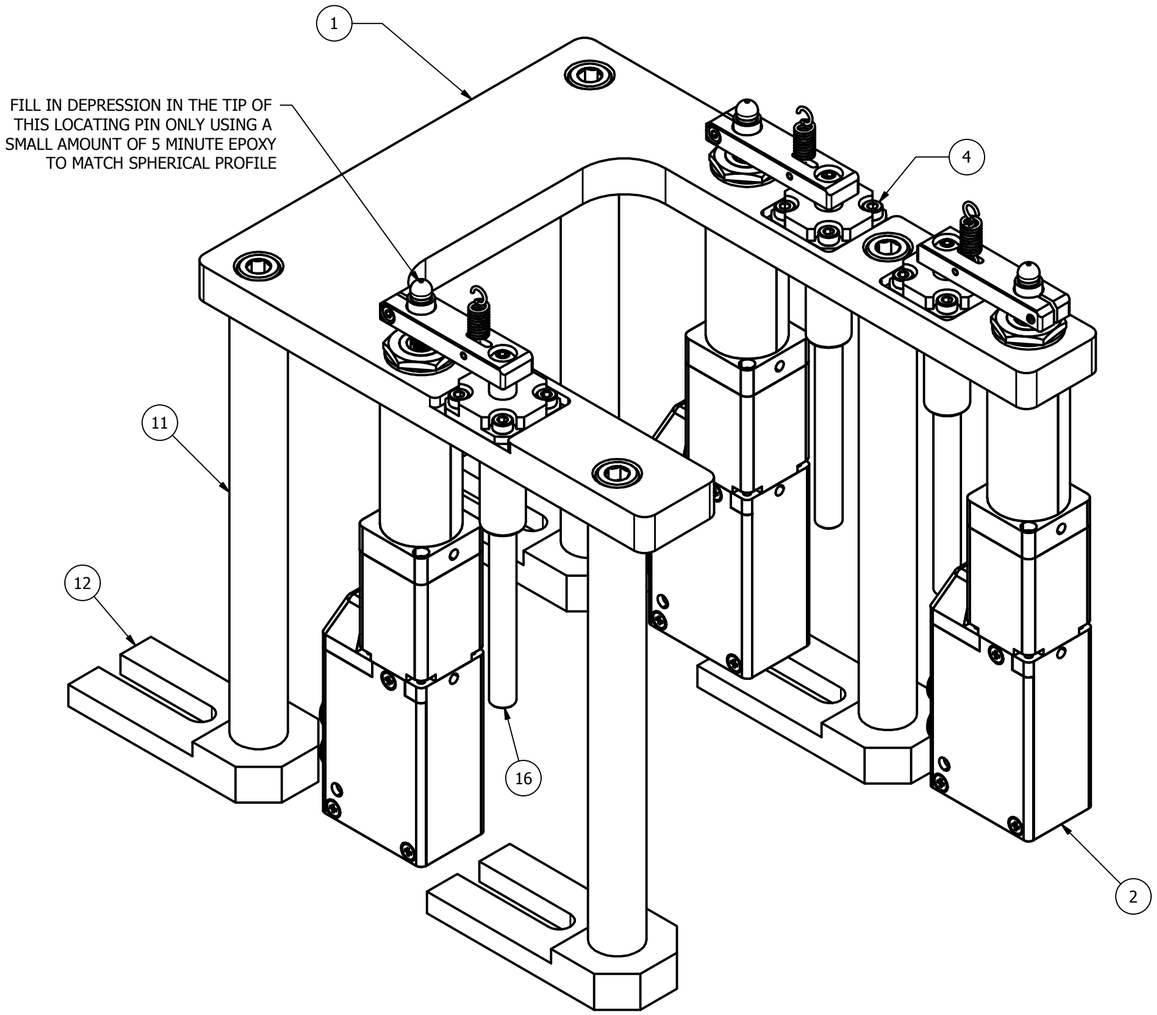

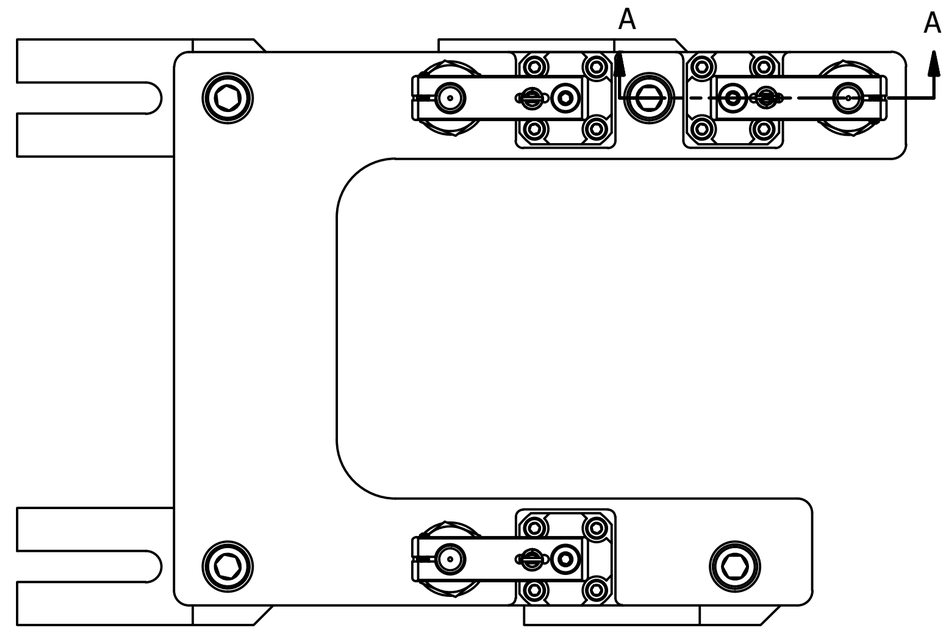

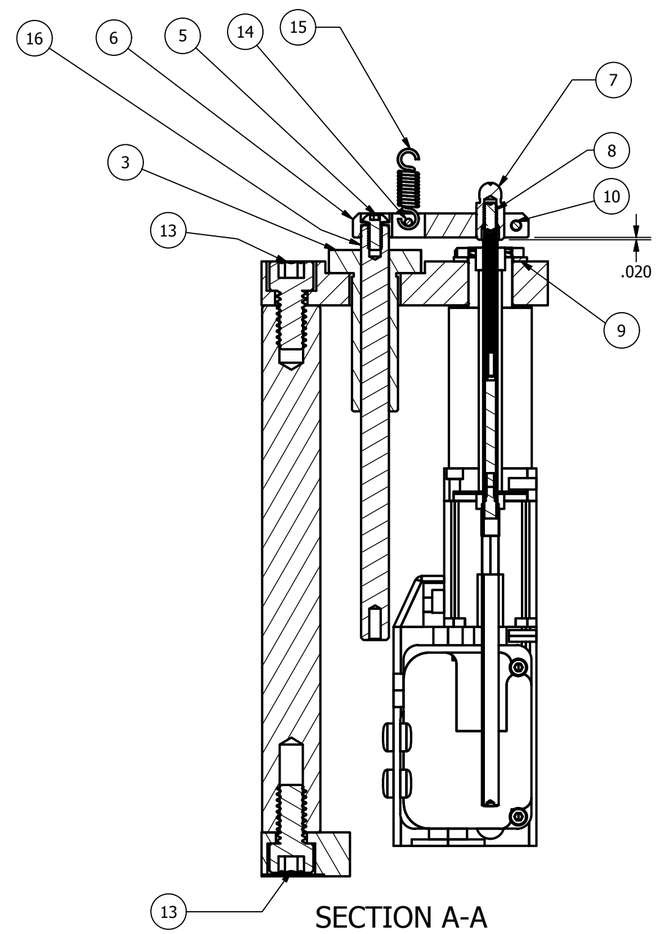

SECTION A-A

NOTES:
1.) USE LOCTITE 222 ON ALL THREADED FASTENERS UNLESS OTHERWISE SPECIFIED
2.) UPON ASSEMBLY OF LOCATING PINS TO ACTUATORS, FIRST INSTALL SET SCREWS INSIDE LOCATING PINS. ADJUST SET SCREW POSITION SO THAT MAXIMUM THREAD ENGAGEMENT TO ACTUATOR IS OBTAINED WHILE ALLOWING ACTUATOR TO PROPERLY HOME UPON POWER UP. USE CAUTION NOT TO DAMAGE THE SPLINED SHAFT OF THE ACTUATOR.
3.) CLAMP MPS SPRING MOUNT INTO POSITION AROUND EACH LOCATING PIN PER SECTION VIEW DIMENSION SHOWN.

ITEM	QTY	FILE NAME	PART NUMBER	VENDOR	DESCRIPTION	A.I. PART #	A.I. VENDOR
1	1	MPS Bottom Plate.ipt	J002887	HHMI: JFRC - ID&F	MPS Bottom Plate	N/A	N/A
2	3	T-NA08A50-S.iam	T-NA08A50-S-KT04	ZABER	LINEAR ACTUATOR, 50MM TRAVEL	N/A	N/A
3	3	LHSKW6.ipt	LHSKW6	MISUMI	FLANGED LINEAR BUSHING, COMPACT TYPE, DOUBLE	N/A	N/A
4	12	92290A058.ipt	92290A058	MCMASTER	SCREW, SHC, SS, M2.5 x 8	N/A	N/A
5	3	94500A221.ipt	94500A221	MCMASTER	SCREW, BHC, SS, M3 x 6	N/A	N/A
6	3	MPS Spring Mount.ipt	J002886	HHMI: JFRC - ID&F	MPS Spring Mount	N/A	N/A
7	3	FPQSTA6-P4_76-L8-B2.ipt	FPQSTA6-P4.76-L8-B2	MISUMI	LOCATING PIN, SPHERICAL SMALL HEAD, TAPPED	N/A	N/A
8	3	92015A104.ipt	92015A104	MCMASTER	SCREW, SET, SS,M3 x 6	N/A	N/A
9	3	98017A199.ipt	98017A199	MCMASTER	WASHER, SS, 0.39 ID , 0.625 OD	N/A	N/A
10	3	91292A832.ipt	91292A832	MCMASTER	SCREW, SHC, SS, M2 x 8	N/A	N/A
11	4	MPS TR6 AI.ipt	J005123	HHMI: JRC - ID&F	MPS TR6 AI	TR6	THOR LABS
12	4	MPS BA1S AI.ipt	J005126	HHMI: JRC - ID&F	MPS BA1S AI	BA1S	THOR LABS
13	8	92185A537.ipt	92185A537	HHMI: JRC - ID&F	SCREW, SHC, SS, 1/4-20 x 1/2 L	N/A	N/A
14	3	90145A417.ipt	90145A417	MCMASTER	PIN, DOWEL, SS, 0.0625 DIA x 0.375 L	N/A	N/A
15	3	80197.ipt	80197	CENTURY SPRING	SPRING, EXTENSION, MW, 0.18 OD x 0.63 L, 0.029 WIRE DIA	N/A	N/A
16	3	SSFAW6-90-M3-N3.ipt	SSFAW6-90-M3-N3	MISUMI	LINEAR SHAFT, 6MM DIA x 90MM L, M3 TAPPED	N/A	N/A

PARTS LIST

NOTICE:
INFORMATION CONTAINED IN THIS DOCUMENT OR ANY REPRODUCTION THEREOF, IS PROPRIETARY INFORMATION AND PROPERTY OF HOWARD HUGHES MEDICAL INSTITUTE. IT SHALL NOT BE DISCLOSED, COPIED, DUPLICATED OR USED FOR MANUFACTURE, PRODUCTION OR PROCUREMENT, WITHOUT THE EXPRESS WRITTEN PERMISSION OF HOWARD HUGHES MEDICAL INSTITUTE.

(UNLESS SPECIFIED OTHERWISE)
PRIMARY UNITS: INCHES
[SECONDARY UNITS]: MILLIMETERS

PRIMARY TOLERANCES:	
X.X	± 0.020
X.XX	± 0.010
X.XXX	± 0.005
X.XXXX	± 0.0005
ANGULAR	± 0.5 DEG

- DO NOT SCALE DRAWING -
THIRD ANGLE PROJECTION:

hhmi Howard Hughes Medical Institute
hhmi janelia Research Campus

MPS Bottom Plate Assy.iam

SIZE	PART NUMBER	REV	SHEET
C	J005124	-	1 OF 1